RF Components

Model Number:
COM02KXP-2732

2-Way Passive Wide Band Splitter/Combiner

0.5-18 GHz

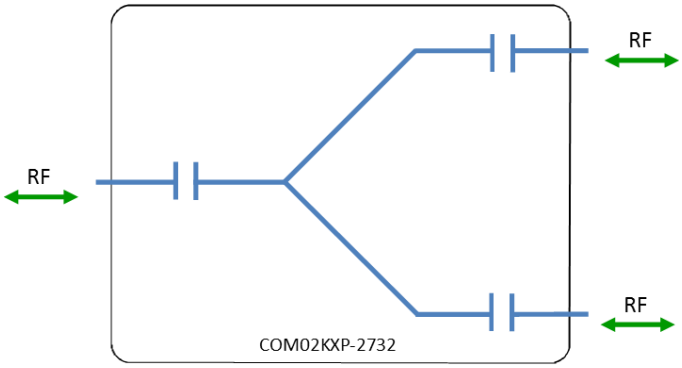

Available with RF connector options:
- 50 Ω SMA
- 50 Ω N-Type

Passive

RF Parameters			
COM02KXP-2732-XXXX		S5S5	N5N5
Frequency Range		0.5 - 18 GHz	
RF Connectors		50Ω SMA	50Ω N-Type
Insertion Loss (dB)		2.0	1.8
Input Return Loss (dB)	Max	17	16
	Typ.	14	14
Output Return Loss (dB)	Min	17	18
	Typ.	14	15
Isolation (dB)	Min	16	16
Amplitude Balance (dB)	Min.	≤ ± 0.5	≤ ± 0.6
Phase Balance (Φ)		≤ ± 5°	≤ ± 5°

The given Insertion Loss specified is the loss above the theoretical limit for a lossless divider
10MHz Insertion Loss is up to 3dB above the theoretical loss*
10MHz Rejection is 20dB*

Broadcast

Marine Oil & Gas

SNG & VSAT

Satellite Teleport

RF Components

Model Number:
COM02KXP-2732
2-Way Passive WideBand Splitter/Combiner

Technical specifications and operating parameters

Environmental		
Operating Temperature		-45˚C to +85˚C
Storage Temperature		-45˚C to +85˚C
Location		Indoor use Only
Humidity	Max	85% non-condensing
Altitude	Max	10,000 feet

Max Operating Parameters	
Power Rating	30W as splitter 1W as combiner
DC Voltage	N/A
DC Current	N/A
DC Consumption	N/A

❗ Operation beyond these limits may cause instantaneous and permanent damage.

Physical Dimensions (± 0.3mm)

50Ω SMA

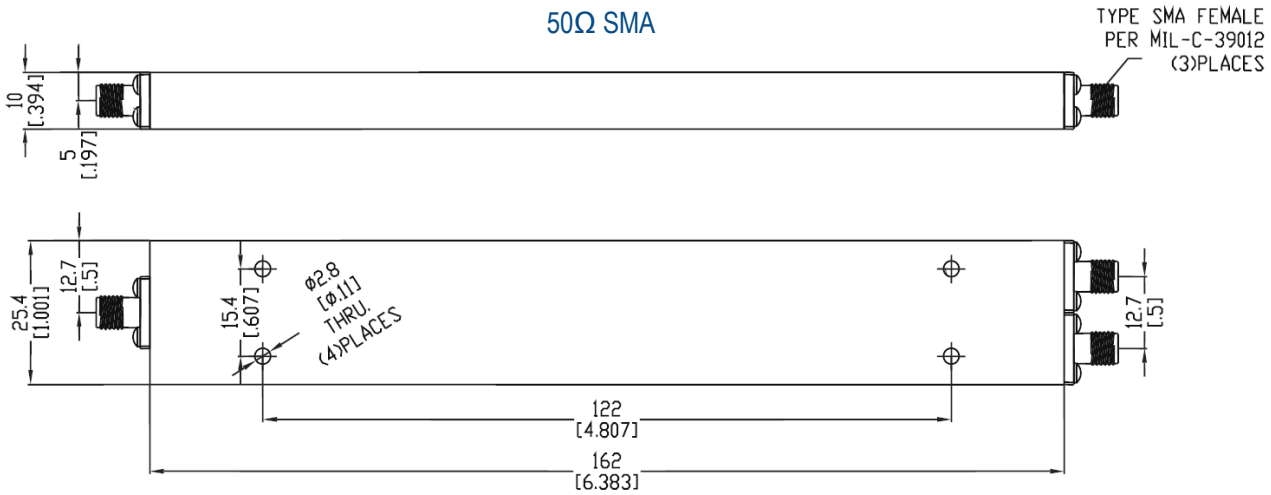

50Ω N-Type

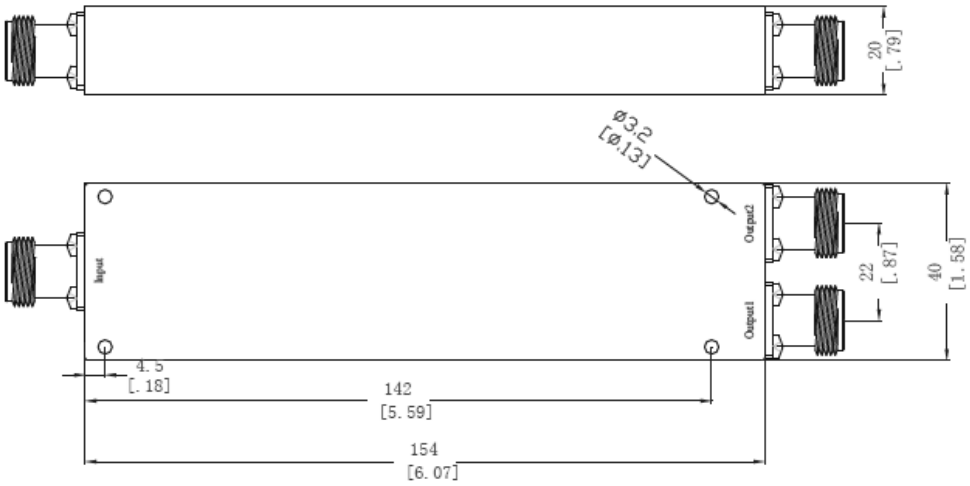

Note: The specification is subject to regular reviews and will be updated from time to time as part of our continuing product development and improved specification accuracy.

ETL SYSTEMS LIMITED
Coldwell Radio Station
Madley
Hereford
England HR2 9NE

TELEPHONE
+44 (0)1981 259020

EMAIL
info@etlsystems.com

FACSIMILE
+44 (0)1981 259021

WEB
www.etlsystems.com