RF Components

Model Number:
**F-BP-K1-7008-S5S5**

# Ku-Band Band Pass Filter

## 10700 - 11700 MHz

Available with RF connector options:
- 50 Ω SMA

### Physical Dimensions (±0.3mm)

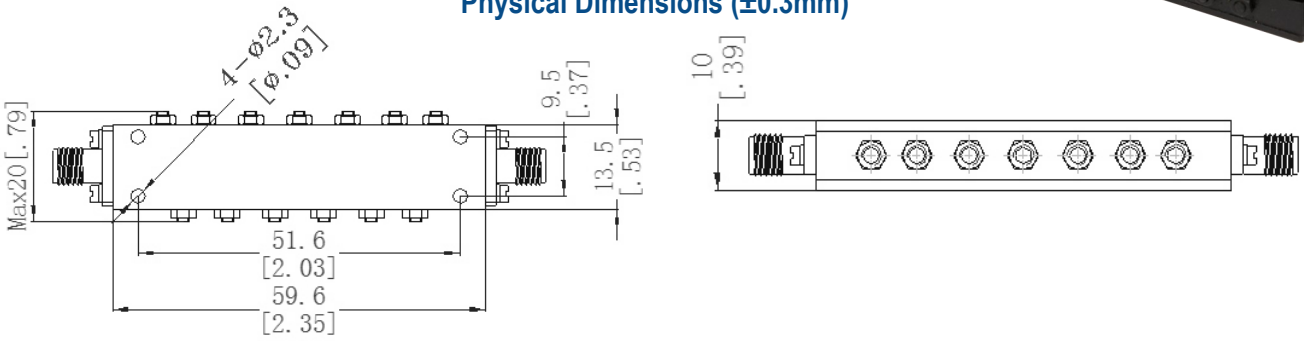


| RF Parameters | | |
|---|---|---|
| **F-BP-K1-7008** | | S5S5 |
| Frequency Range | | 10700-11700 MHz |
| RF Connectors | | 50Ω SMA |
| Insertion Loss (dB) | | ≤1.2 |
| Passband ripple | | 0.3dB pk-pk maximum within any 72MHz in passband |
| Group delay variation | | 1 ns max pk-pk over any 36MHz in passband |
| Input Return Loss (dB) | Typ. | 18 |
| | Min | 14 |
| Output Return Loss (dB) | Typ. | 18 |
| | Min | 14 |
| Rejection | @DC-8800 MHz | ≥60dB |
| | @14000-24000 MHz | ≥40dB |
| | @9750 MHz | ≥50dB |

| Environmental | | |
|---|---|---|
| Operating Temperature | | 0 to +40°C |
| Storage Temperature | | -40°C to +85°C |
| Location | | Indoor |
| Humidity | Max | Up to 90% , Non-condensing |
| Altitude | Max | Under 2500 meters |

| Max Operating Parameters | |
|---|---|
| Input RF Power | +37dBm (5W) |
| DC Voltage | 0V |
| DC Current | N/A |
| DC Consumption | N/A |

**!** Operation beyond these limits may cause instantaneous and permanent damage.

Note: The specification is subject to regular reviews and will be updated from time to time as part of our continuing product development and improved specification accuracy.

**Broadcast**

**Marine Oil & Gas**

**SNG & VSAT**

**Satellite Teleport**