DIV08F1A-2409

8-way IF to S band Active Splitter: 50 MHz to 2800MHz

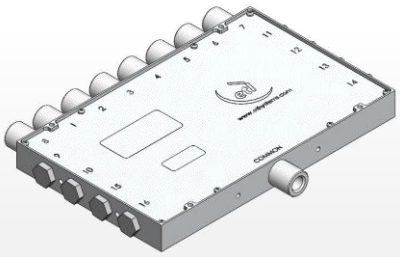

DIV08F1A-2409 is a 8-way active splitter covering IF, and L- and S band (50 to 2800MHz) and passes 10MHz. It is built with an integral regulator and requires a DC voltage within 8 to 18V. All RF ports are DC blocked.

This component is available with the following RF connector options: 50 Ω SMA, N-type and BNC.

Summary table for RF performance over L-band operation, 50 MHz to 2800 MHz

Model Numbers	Conn.	Gain (dB)	Gain flatness	1dB GCP		NF (dB)		Return Loss (dB)	
				Typical	Min	Typical	Max	Typical	Min
DIV08F1A-2409-S5S5	50Ω SMA	0 ± 2	± 1.8	5	2	12	15	16	12
DIV08F1A-2409-N5N5	50Ω N-type	0 ± 2	± 1.8	5	2	12	15	15	12
DIV08F1A-2409-B5B5	50Ω BNC	0 ± 2	± 2.0	5	2	12	15	14	10

1dB Gain Compression Point (1dB GCP) is in relation to output power.
Maximum current consumption is 200mA, typically 160mA.
Isolation: Isolation between any 2 output ports is typically 16dB .
Isolation: Isolation (reverse gain) between the common port and any of the output ports is typically 35dB.
10MHz Insertion loss is 0 ± 3dB

Maximum acceptable operating parameters for reliable and safe operation

Parameter	Value	*Comment*
Input RF power	+20 dBm	Max total RF power
DC Voltage	18 V	Any RF port
Operating temperature	0 to 45°C	Indoor use only
Storage Temperature	-20°C to +75°C	
Humidity	85%	Non-condensing

! Operation beyond these limits may cause instantaneous and permanent damage.

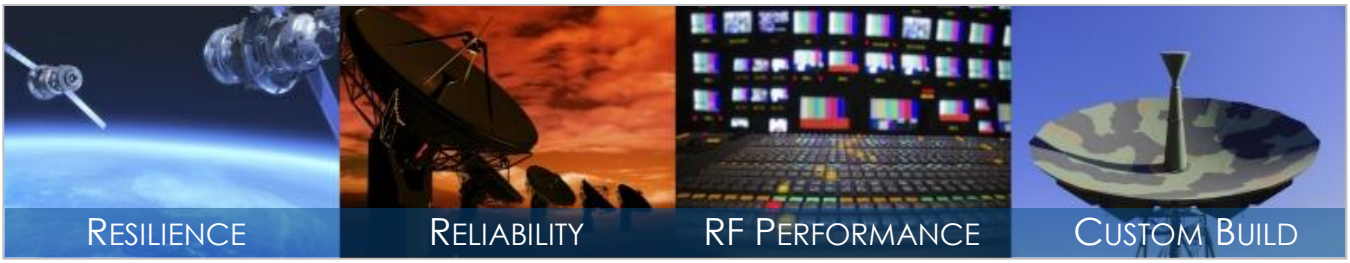

DIV08F1A-2409

8-way Active IF to S band Splitter

Vector diagram & physical dimensions

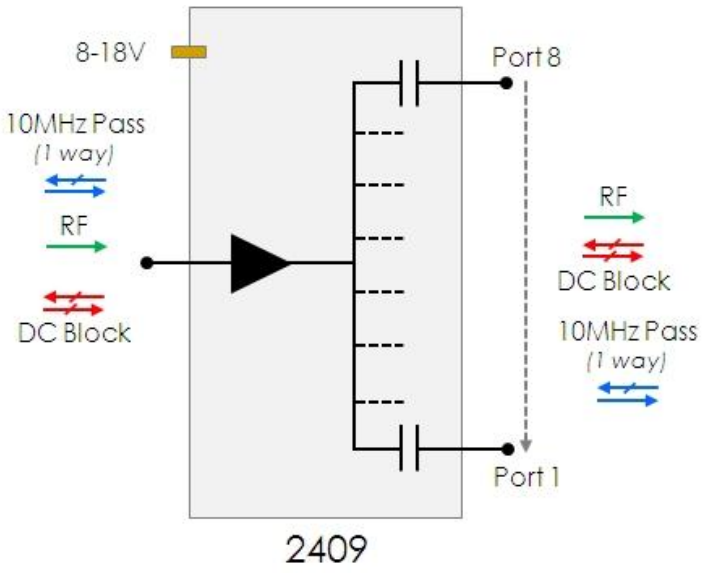

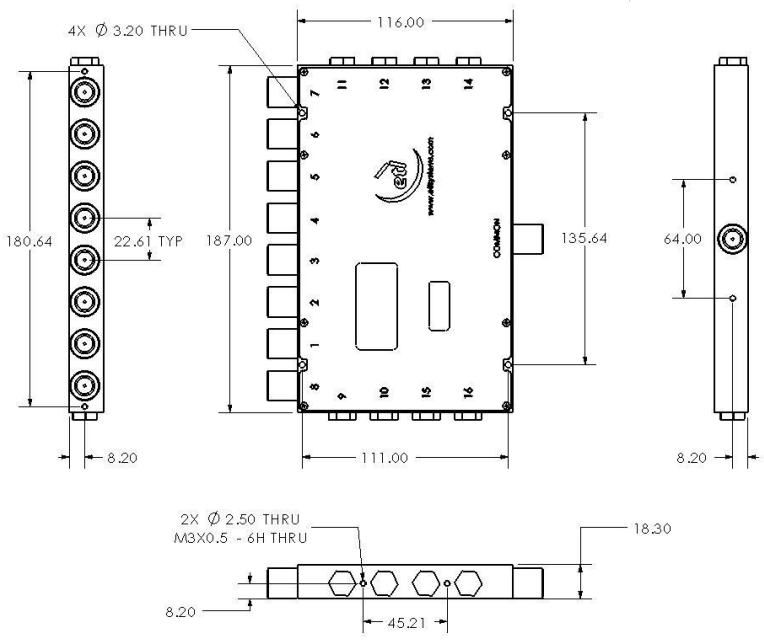

ETL Systems Ltd, Coldwell Radio Station, Madley, Hereford, HR2 9NE, England

ETL Systems design, develop and manufacture specialist equipment for satellite ground stations. For a full description of the ETL product range, please see our website at *www.etlsystems.com*. This product range provides the basis for meeting your specific demands.

T el +44 (0)1981 259020
Fax +44 (0)1981 259021
info@etlsystems.com

THE QUEEN'S AWARDS FOR ENTERPRISE 2007 2009

ISO 9001 certified

RoHS Compliant

DIV08F1A-2409

8-way Active IF to S band Splitter

Alternative 8-way Active Splitters

Model Number	Gain / Frequency Response	Other Features
DIV08F2A-2333		IF frequency 20-1000MHZ. Integrated
DIV08L1A-2308	Unity gain	DC block on ALL ports
DIV08L1A-2320		10MHz/DC pass on ALL ports
DIV08L1A-2330	Unity gain	LNB bias with dual DC input pins
DIV08L1A-2334	Unity gain	10MHz/DC pass on port 1 only
DIV08L1A-2352	Unity gain	10MHz pass on ports 1 and 2 only, DC block on ALL ports
DIV08L1A-2354	Unity gain	10MHz/DC pass on ALL ports, DC block between outputs
DIV08L1A-2356	2dB gain / flat frequency response	Auto-changeover redundant amplifiers
DIV08L1A-2357	Unity gain	10MHz pass and DC block on ALL ports
DIV08F1A-2409	Unity gain / flat response	Extended frequency range: 50 to 2800MHz & 10MHz pass
DIV08B2A-2410	Unity gain / flat response	Extended frequency range: 50 to 2150MHz & 10MHz pass

THE QUEEN'S AWARDS FOR ENTERPRISE 2007 2009

ETL Systems Ltd, Coldwell Radio Station, Madley, Hereford, HR2 9NE, England

ETL Systems design, develop and manufacture specialist equipment for satellite ground stations. For a full description of the ETL product range, please see our website at *www.etlsystems.com*. This product range provides the basis for meeting your specific demands.

ISO 9001 certified

RoHS Compliant

T el +44 (0)1981 259020
Fax +44 (0)1981 259021
info@etlsystems.com