RF Components

# 4-Way L-Band Active Combiner

## 850 - 2150 MHz

Model Number:
**COM04L1A-2228**

- 3dB Mean Gain
- 6dB positive gain slope
- Requires 8-18V external DC bias

Available with RF connector options:

- 50 Ω SMA
- 50 Ω N-type
- 50 Ω BNC
- 75 Ω BNC
- 75 Ω F-type

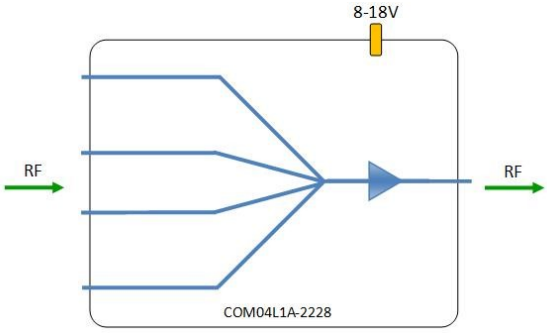


**8-18V**
External DC powering

**Compact**
Housed in rugged compact enclosure

**Flexible Mounting**
Tapped screw & through hole mounting options

**850-2150 MHz**
Operating frequency range.

| RF Parameters | | | | | | |
|---|---|---|---|---|---|---|
| **COM04L1A-2228-XXXX** | | S5S5 | N5N5 | B5B5 | B7B7 | F7F7 |
| Frequency Range | | 850 - 2150 MHz | | | | |
| RF Connectors | | 50Ω SMA | 50Ω N-Type | 50Ω BNC | 75Ω BNC | 75Ω F-Type |
| Mean Gain (dB) | | 3 ±0.50 | 3 ±0.50 | 3 ±0.60 | 3 ±0.75 | 3 ±0.75 |
| Slope | | 6 ± 1 dB | 6 ± 1 dB | 6 ± 1 dB | 6 ± 1 dB | 6 ± 1 dB |
| Input Return Loss (dB) | Typ. | 23 | 23 | 20 | 15 | 15 |
| | Min | 15 | 15 | 12 | 10 | 10 |
| Output Return Loss (dB) | Typ. | 20 | 20 | 18 | 12 | 12 |
| | Min | 14 | 14 | 10 | 8 | 8 |
| Output P1dB GCP** (dBm) | Typ. | 13 | 13 | 13 | 13 | 13 |
| | Min | 10 | 10 | 10 | 10 | 10 |
| Isolation (dB) | Typ. | 20 | 20 | 20 | 20 | 20 |
| Output IP3(dBm) | Typ. | 22 | 22 | 22 | 22 | 22 |
| Noise Figure (dB) | Typ. | 18 | 18 | 18 | 18 | 18 |

10MHz Rejection is 20dB*
*To ports which are applicable
**GCP (Gain Compression Point)

**Broadcast**

**Marine Oil & Gas**

**SNG & VSAT**

**Satellite Teleport**

RF Components

# Model Number:
# COM04L1A-2228
## 4-Way L-Band Active Combiner

## Technical specifications and operating parameters

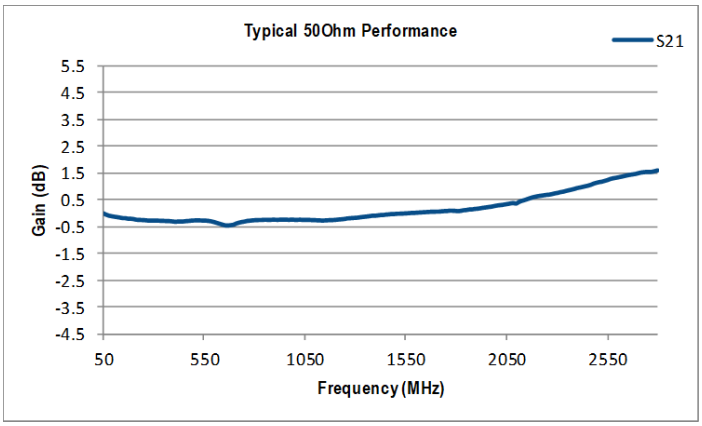


Gain (dB)

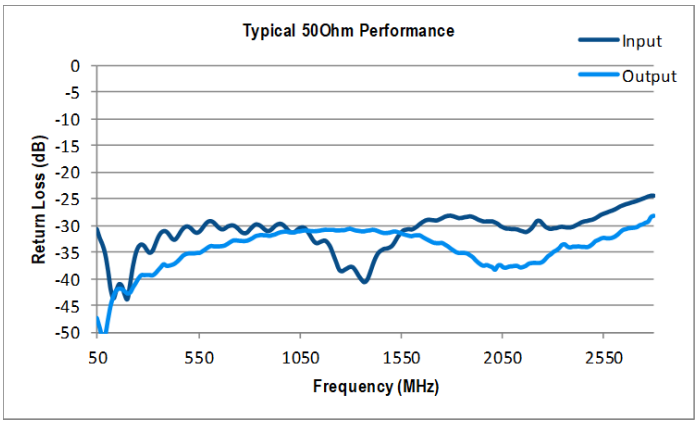


Return Loss (dB)

| Environmental | | |
|---|---|---|
| Operating Temperature | | 0˚C to +45˚C |
| Storage Temperature | | -20˚C to +75˚C |
| Location | | Indoor use Only |
| Humidity | Max | 85% non-condensing |
| Altitude | Max | 10,000 feet |

| Max Operating Parameters | |
|---|---|
| Input RF Power | +24 dBm (250mW) |
| DC Voltage | 35V on any RF port |
| DC Consumption | 100mA Max typical 80mA |

❗ Operation beyond these limits may cause instantaneous and permanent damage.

## Physical Dimensions (mm)

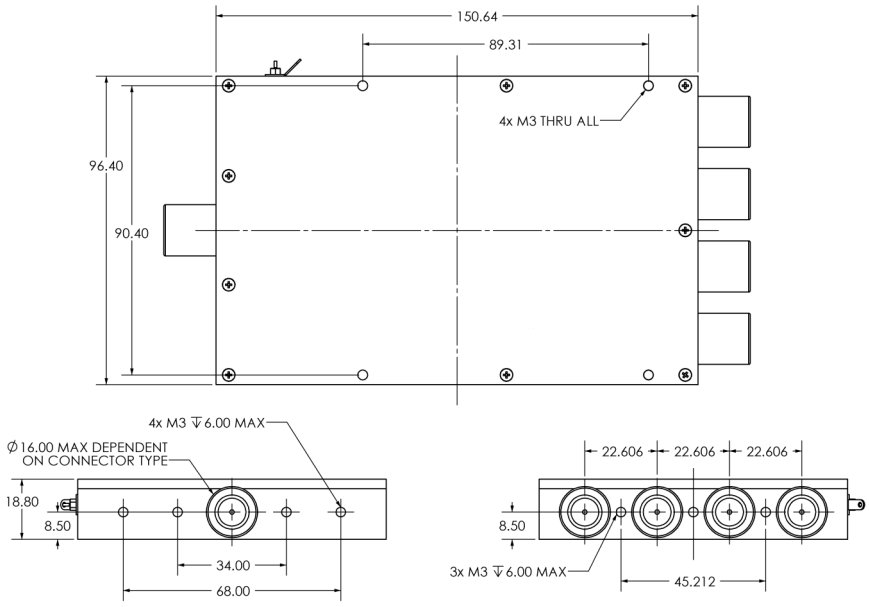


Note: The specification is subject to regular reviews and will be updated from time to time as part of our continuing product development and improved specification accuracy.


ETL SYSTEMS LIMITED
Coldwell Radio Station
Madley
Hereford
England HR2 9NE

TELEPHONE
+44 (0)1981 259020

EMAIL
info@etlsystems.com

FACSIMILE
+44 (0)1981 259021

WEB
www.etlsystems.com