RF Components

3-way S-band Passive Splitter Combiner

700 - 2700 MHz

Model Number:
COM03SXP-2746

- Common port to port 1 DC Pass
- All other ports DC blocked

Available with RF connectors:

- 50 Ω N-type

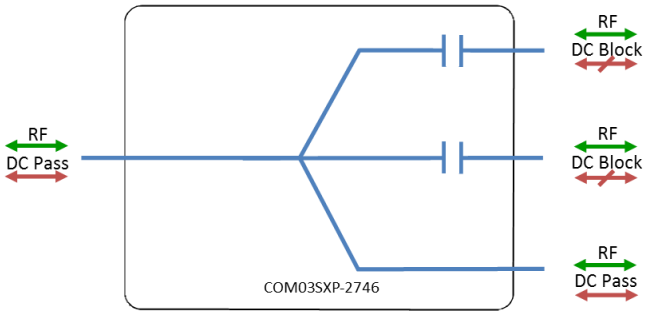

Compact
Housed in rugged compact enclosure

Flexible Mounting
Tapped screw & through hole mounting options

700 - 2700 MHz
Operating frequency range. S-Band ready

Passive

RF Parameters		
COM03SXP-2746-XXXX		N5N5
Frequency Range		700 - 2700 MHz
RF Connectors		50Ω N-Type
Mean Insertion Loss (dB)		0.3±0.3
Input Return Loss (dB)	Typ.	20
	Min	16
Output Return Loss (dB)	Typ.	22
	Min	19
Isolation (dB)	Min	18
Amplitude Balance (dB)		≤ 0.2
Phase Balance (Φ)		≤ 3°
The given Insertion Loss specified is the loss above the theoretical limit for a lossless divider		

Broadcast

Marine Oil & Gas

SNG & VSAT

Satellite Teleport

RF Components

Model Number:
COM03SXP-2746
3-way S-band Passive Splitter Combiner

Technical specifications and operating parameters

Environmental		
Operating Temperature		-65˚C to +85˚C
Storage Temperature		-65˚C to +85˚C
Location		Indoor use Only
Humidity	Max	85% non-condensing
Altitude	Max	10,000 feet

Max Operating Parameters	
Input RF Power into matched load with 20dB return loss	+46dBm (40W) as Splitter & +31.23dBm (1.33W) as Combiner
DC Voltage	50 V
DC Current	N/A
DC Consumption	N/A

! Operation beyond these limits may cause instantaneous and permanent damage.

Physical Dimensions (mm)

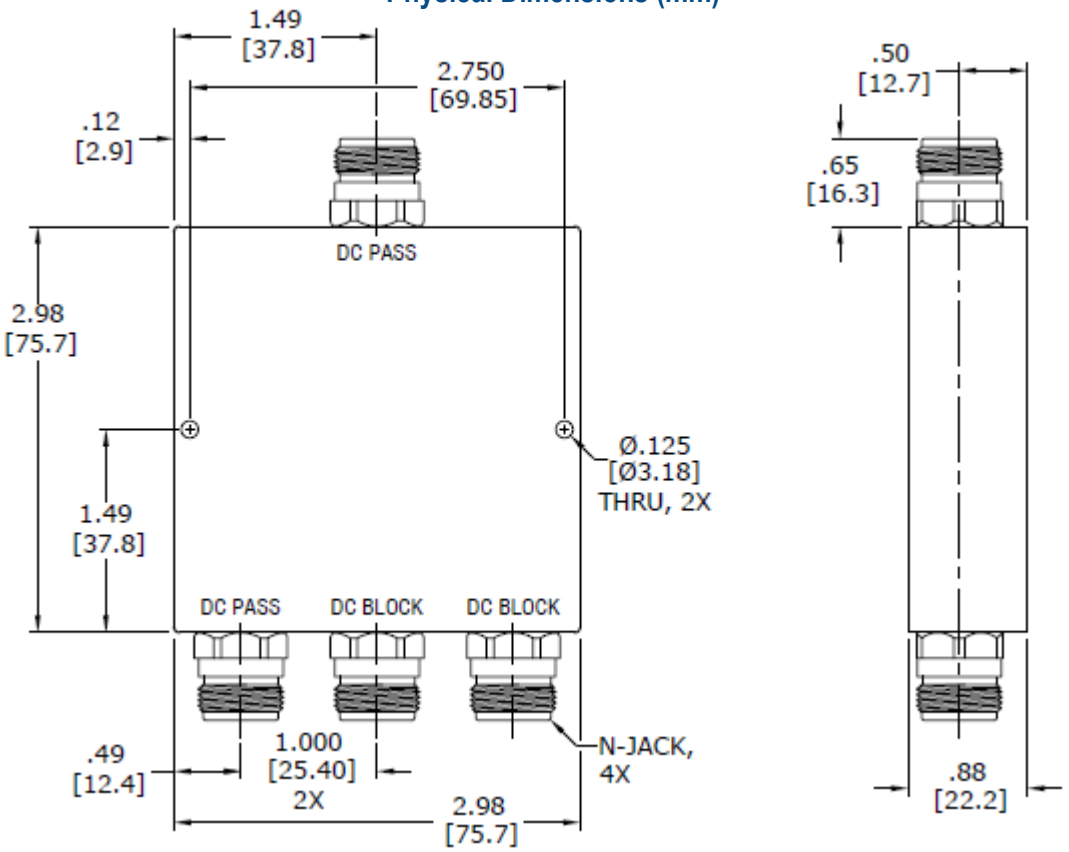

Note: The specification is subject to regular reviews and will be updated from time to time as part of our continuing product development and improved specification accuracy.

ETL SYSTEMS LIMITED
Coldwell Radio Station
Madley
Hereford
England HR2 9NE

TELEPHONE
+44 (0)1981 259020

EMAIL
info@etlsystems.com

FACSIMILE
+44 (0)1981 259021

WEB
www.etlsystems.com