RF Components

Model Number:
COM02L1P-2505

2-Way L-Band Passive Splitter/Combiner
850-2150 MHz

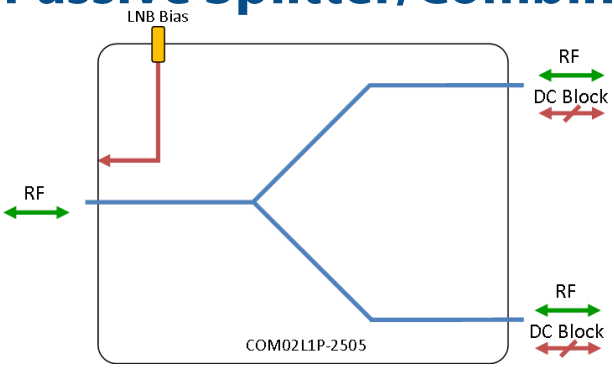

- LNB Bias feed on common port
- DC block all other ports

Available with RF connector options:
- 50 Ω SMA
- 50 Ω N-type
- 50 Ω BNC
- 75 Ω BNC
- 75 Ω F-type.

850-2150 MHz
operating frequency range. L-Band ready

Compact
housed in rugged compact enclosure

Flexible Mounting
Tapped screw & through hole mounting options

LNB Bias

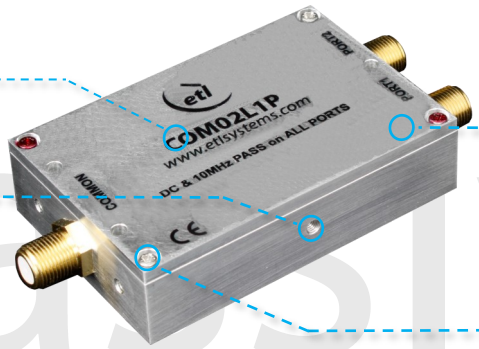

Passive

RF Parameters						
COM02L1P-2505-XXXX		S5S5	N5N5	B5B5	B7B7	F7F7
Frequency Range		850-2150 MHz				
RF Connectors		50Ω SMA	50Ω N-Type	50Ω BNC	75Ω BNC	75Ω F-Type
Mean Insertion Loss (dB)		0.4 ± 0.2	0.4 ± 0.2	0.4 ± 0.2	0.4 ± 0.2	0.4 ± 0.2
Flatness ± (dB)		0.25	0.25	0.25	0.25	0.25
Input Return Loss	Typ.	20	20	20	18	18
	Min	15	15	15	13	13
Output Return Loss	Typ.	26	26	26	26	26
	Min	18	18	18	18	18
Isolation (Typical dB)	Typ.	25	25	25	25	25
	Min	20	20	20	20	20
Amp Balance (dB)		≤0.2	≤0.2	≤0.2	≤0.5	≤0.5
Phase Balance (Degrees)		≤2°	≤2°	≤2°	≤5°	≤5°

The given Insertion Loss specified is the loss above the theoretical limit for a lossless divider
10MHz Insertion Loss is up to 3dB above the theoretical loss*
10MHz Rejection is 20dB*
*To ports which are applicable

Broadcast

Marine Oil & Gas

SNG & VSAT

Satellite Teleport

RF Components

Model Number:
COM02L1P-2505

2-Way L-Band Passive Splitter/Combiner

Technical specifications and operating parameters

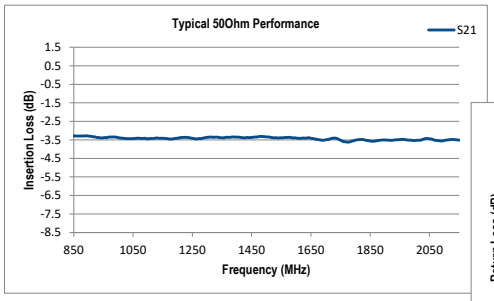

Insertion Loss

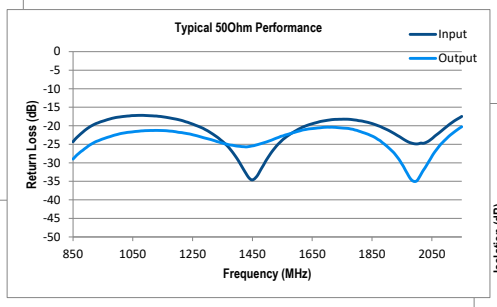

Return Loss

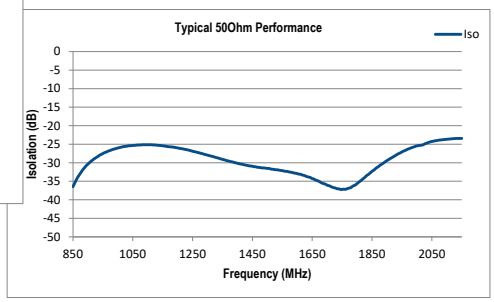

Isolation

Environmental	
Operating Temperature	0˚C to 45˚C
Storage Temperature	-20˚C to +75˚C
Location	Indoor use Only
Humidity	85% non-condensing
Altitude	10,000 feet

Max Operating Parameters	
Input RF Power into matched load with 20dB return loss	+27dBm (500mW) as combiner +37dBm (5W) as splitter
DC Voltage	35V on any RF port
DC Current	2A
DC Consumption	N/A

! Operation beyond these limits may cause instantaneous and permanent damage.

Physical Dimensions

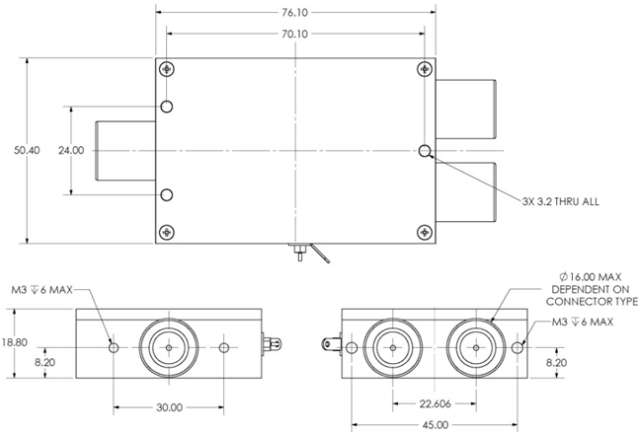

Note 1: The specification is subject to regular reviews and will be updated from time to time as part of our continuing product development and improved spec accuracy.
Note 2: Operation beyond the quoted limits stated above may cause instantaneous and permanent damage.

ETL SYSTEMS LIMITED
Coldwell Radio Station
Madley
Hereford
England HR2 9NE

TELEPHONE
+44 (0)1981 259020

EMAIL
info@etlsystems.com

FACSIMILE
+44 (0)1981 259021

WEB
www.etlsystems.com