EQUL1P-*4501 to 4510*

L-band Passive Equalisers

50Ω impedance range

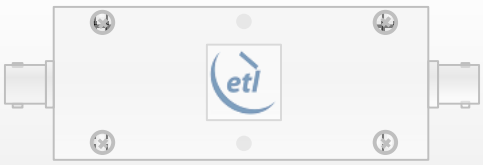

The 4501-4510 series are 50 ohm passive L-band positive slope equalisers available in 1dB slope increments over 1 to 10dB range. These are reciprocal devices with DC block between the two ports.
These components are available with the following RF connector options: 50 Ω SMA, N-type and BNC.

Physical dimensions and appearance

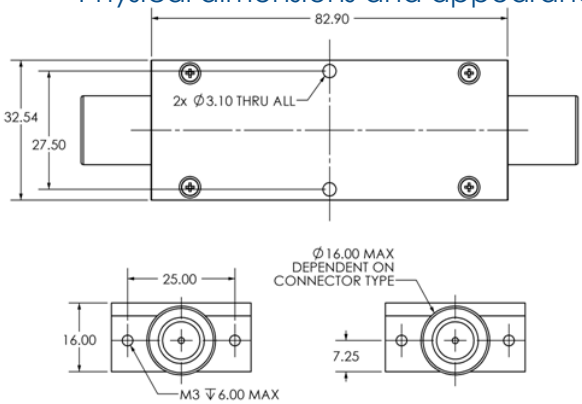

Vector Diagram

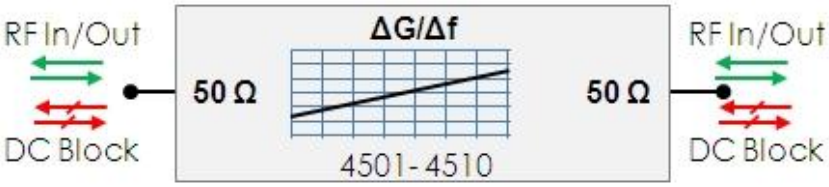

Maximum acceptable operating parameters for reliable and safe operation

Parameter	Value	*Comment*
Input RF power	+37 dBm (5W)	Max total RF power
DC Rating	28V	All RF ports are DC blocked
Operating temperature	0 to 65 C	Indoor use only
Storage Temperature	-20 C to +75 C	
Humidity	90%	Non-condensing

! Operation beyond these limits may cause instantaneous and permanent damage.

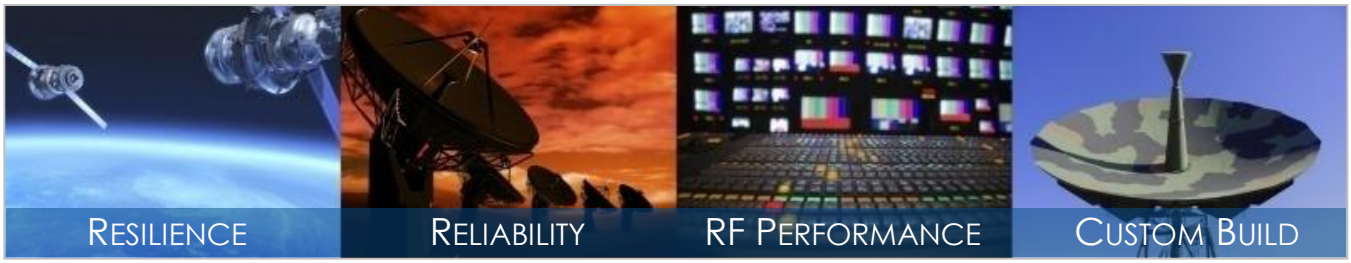

EQUL1P-4501 to 4510

L-band Passive Equaliser

Typical performance - L-band passive equalisers

Model Number	Positive slope (dB)	Slope vs. Frequency variation (dB)	Insertion Loss* (dB)		Return Loss (dB)	
			Typ.	Max	Typ.	Min
EQUL1P-4501						
EQUL1P-4501-S5S5	1	±0.3	2.0	3.5	16	12
EQUL1P-4501-N5N5	1	±0.3	2.0	3.5	16	12
EQUL1P-4501-B5B5	1	±0.3	2.0	3.5	14	10
EQUL1P-4502						
EQUL1P-4502-S5S5	2	±0.4	2.5	3.5	16	12
EQUL1P-4502-N5N5	2	±0.4	2.5	3.5	16	12
EQUL1P-4502-B5B5	2	±0.4	2.5	3.5	14	10
EQUL1P-4503						
EQUL1P-4503-S5S5	3	±0.5	2.5	3.5	18	12
EQUL1P-4503-N5N5	3	±0.5	2.5	3.5	18	12
EQUL1P-4503-B5B5	3	±0.5	2.5	3.5	16	10
EQUL1P-4504						
EQUL1P-4504-S5S5	4	±0.6	3.0	5.0	18	14
EQUL1P-4504-N5N5	4	±0.6	3.0	5.0	18	14
EQUL1P-4504-B5B5	4	±0.6	3.0	5.0	16	12
EQUL1P-4505						
EQUL1P-4505-S5S5	5	±0.8	4.5	6.0	18	14
EQUL1P-4505-N5N5	5	±0.8	4.5	6.0	18	14
EQUL1P-4505-B5B5	5	±0.8	4.5	6.0	16	12
EQUL1P-4506						
EQUL1P-4506-S5S5	6	±1.0	5.5	7.5	18	14
EQUL1P-4506-N5N5	6	±1.0	5.5	7.5	18	14
EQUL1P-4506-B5B5	6	±1.0	5.5	7.5	16	12

* Mid-band insertion loss

THE QUEEN'S AWARDS FOR ENTERPRISE 2007 2009

ETL Systems Ltd, Coldwell Radio Station, Madley, Hereford, HR2 9NE, England

ETL Systems design, develop and manufacture specialist equipment for satellite ground stations. For a full description of the ETL product range, please see our website at *www.etlsystems.com*. This product range provides the basis for meeting your specific demands.

RoHS Compliant

T el +44 (0)1981 259020
Fax +44 (0)1981 259021
info@etlsystems.com

EQUL1P-4501 to 4510

L-band Passive Equaliser

Typical performance - L-band passive equalisers

Model Number	Positive slope (dB)	Slope vs. Frequency variation (dB)	Insertion Loss* (dB) Typ.	Insertion Loss* (dB) Max	Return Loss (dB) Typ.	Return Loss (dB) Min
EQUL1P-4507						
EQUL1P-4507-S5S5	7	±1.0	5.0	7.0	18	14
EQUL1P-4507-N5N5	7	±1.0	5.0	7.0	18	14
EQUL1P-4507-B5B5	7	±1.0	5.0	7.0	18	12
EQUL1P-4508						
EQUL1P-4508-S5S5	8	±1.0	5.5	8.0	18	15
EQUL1P-4508-N5N5	8	±1.0	5.5	8.0	18	15
EQUL1P-4508-B5B5	8	±1.0	5.5	8.0	18	13
EQUL1P-4509						
EQUL1P-4509-S5S5	9	±1.5	6.0	8.5	20	15
EQUL1P-4509-N5N5	9	±1.5	6.0	8.5	20	15
EQUL1P-4509-B5B5	9	±1.5	6.0	8.5	18	13
EQUL1P-4510						
EQUL1P-4510-S5S5	10	±1.5	6.0	9.0	20	15
EQUL1P-4510-N5N5	10	±1.5	6.0	9.0	20	15
EQUL1P-4510-B5B5	10	±1.5	6.0	9.0	18	13

* Mid-band insertion loss

ETL's L-band passive frequency equalisers range

Model Number	Positive Slope Range	RF Connector Impedance	Other features
EQUL1P-4501 to 4510	1 to 10dB	50Ω	DC block
EQUL1P-4511 to 4520	1 to 10dB	75Ω	DC block
EQUL1P-4521 to 4530	1 to 10dB	50Ω	DC and 10MHz Pass
EQUL1P-4531 to 4540	1 to 10dB	75Ω	DC and 10MHz Pass

Please note: custom products are available. Please contact us with your enquiry

THE QUEEN'S AWARDS FOR ENTERPRISE 2007 2009

ETL Systems Ltd, Coldwell Radio Station, Madley, Hereford, HR2 9NE, England

ETL Systems design, develop and manufacture specialist equipment for satellite ground stations. For a full description of the ETL product range, please see our website at *www.etlsystems.com*. This product range provides the basis for meeting your specific demands.

RoHS Compliant

T el +44 (0)1981 259020
Fax +44 (0)1981 259021
info@etlsystems.com